ISON SOLAR SOLUTION



New Generation 〉〉

Manufacturing & installation of solar energy development structure

# Floor Beam Modular Processing Method



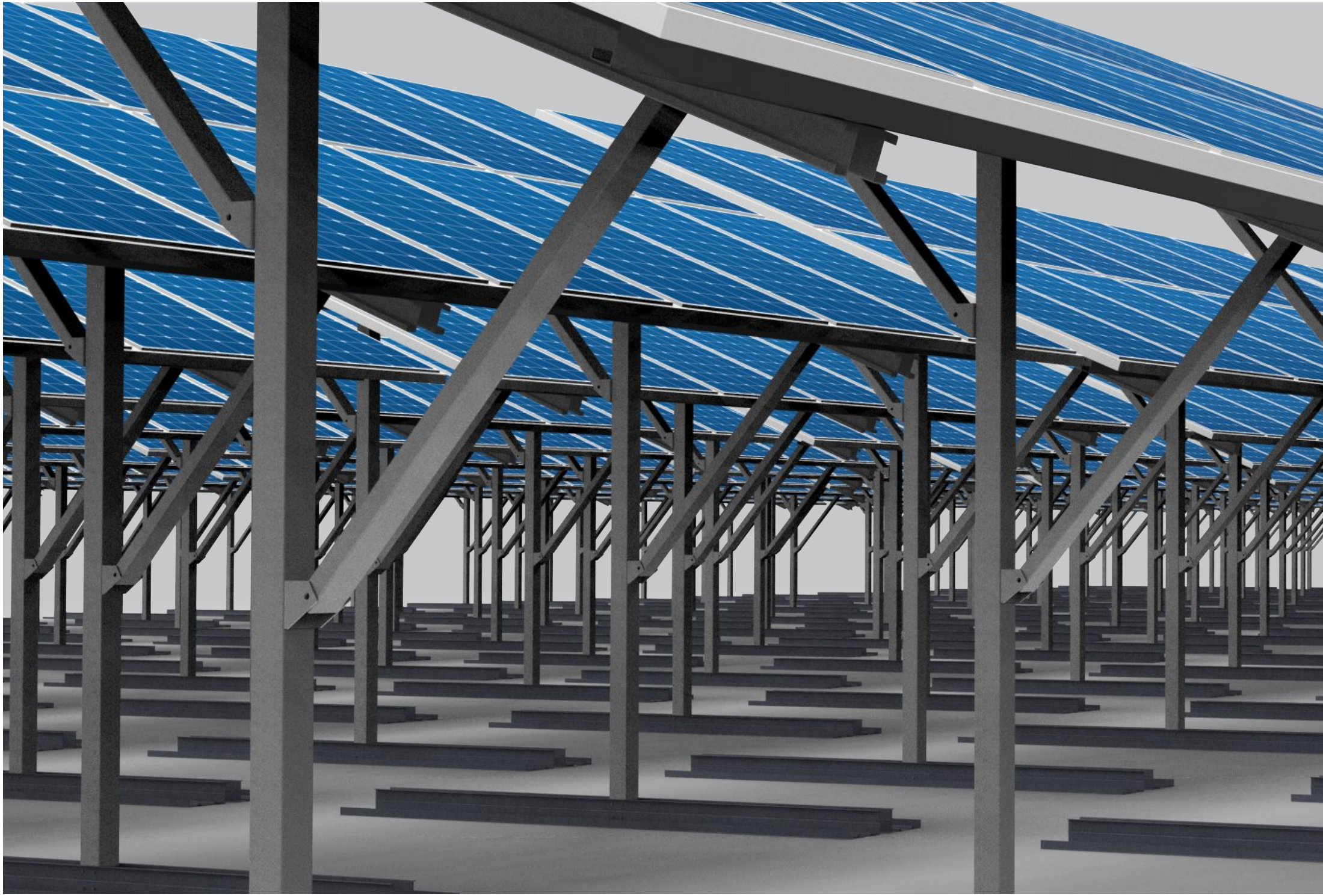



ISON
INFRA SOLUTION

# Manufacturing, installation and maintenance of solar energy structure

**The strongest structure is made in the easiest way with the cheapest price!**

**ISON Solar Solution is providing the exclusive solar solution to fulfill all three of quality stableness, convenience, and economic value.**


Greeting·4 / About us·5
Solar energy structure installation processing method overview·6
Floor beam modular processing method features·7
Advantages of floor beam modular processing method /
Comparison of construction period between floor beam modular processing method with other processing methods·9
Review on stableness of floor beam constructing methods·10
Installation process·11 / Maintenance·11 / Detailed explanation·12
Comparison of product characteristics·18
Test results of corrosion resistance of solar energy structure materials·19

# CREATIVITY·CHALLENGE·SHARING

## We are enhancing your company's competitiveness with creative and innovative technology!




ISON is making an effort to make safer and more convenient products based on creative innovation.

We are now introducing the field of solar energy as a part of eco-friendly energy with innovative products oriented with convenience, safety, and 100% recyclability.

If construction of solar energy structure that makes energy in the use of eco-friendly resources contaminates the soil and causes natural disasters, it is regarded as a facility with environmental pollution.

With the least amount of carbon from the manufacturing and processing methods that are completely recyclable, we will make an effort to create a cleaner world.

ISON Solar CEO, Eung-wook Kim

## Company specializing in innovative solar energy structure, construction processing method & maintenance!

We provide the best products and technology in the field of installation processing methods and maintenance for solar energy developing devices.

Solar energy developing devices are planned for the operation of more than 30 years. Therefore, structures for supporting the module except for the solar energy modules and electronic devices produced by the specialized company, selection of construction method, and accurate construction are very important. Non-standardized structures and construction processing methods cause many problems against consistent quality and stable supply of a large amount of facilities with the current methods in relying on the specialized companies.

ISON Solar Corporation has developed solar energy structure module construction processing methods to be used for more than 50 years for the first time in the world by mobilizing and completing the products assembled in the fields with all the structures to the location for installation.

As an innovative company in providing the solution for manufacturing and installation and maintenance of solar energy structures fulfilling three of the quality stableness, convenience, and economic value in the easiest construction processing methods with the cheapest price for the strongest structure, ISON is promising to enhance your company's competitiveness.

ISON
INFRA SOLUTION

### Solar Energy Development Business

6 elements suggested by ISON

5 elements inevitable for the quality

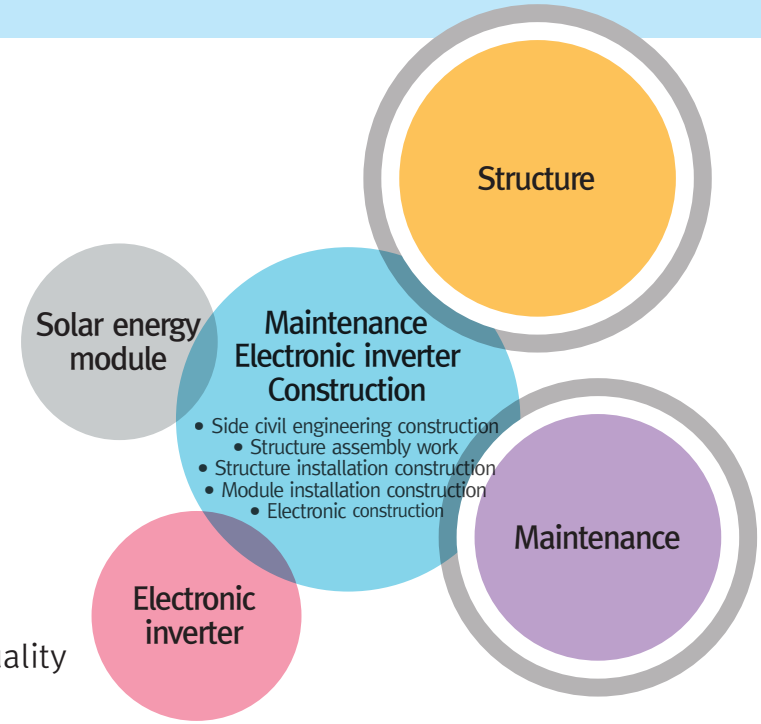




# Solar Energy Structure Installation Processing Method Overview



Floor beam and modular construction processing methods of ISON is a produce improved innovatively from previous construction processing methods, developing floor beam construction methods in the use of products formed with high-intensity and anti-corrosive metal materials (PosMac) and modular construction processing methods for moving the assembled solar energy module from the field shop to the location of installation and actually installing them with the devices for the first time in the world. This modular processing method enhances stableness and durability of the assembly quality while simplifying the installation process and reducing the costs.

## Characteristics of floor beam & modular processing methods

**(1 grade construction processing methods in the carbon certificate)**

**Foundation and structure separating methods**

▶ Foundation structure combined modular processing methods

**Weld manufacturing and zinc plating methods process**

▶ Productions of anti-corrosive raw materials with specifications in the factory and bolt fastening methods

Solar energy development structure uses the most outstanding materials in terms of anti-corrosiveness applying optimal design and construction processing method to use products stably for more than 50 years. They have the following characteristics.

- Floor beam construction processing method is eco-friendly without using concrete or applying welding work
- It is available to easily assemble structures produced from the factory with specifications in the field representing high quality and shortening the installation time.
- Raw materials with high anti-corrosiveness (PosMac) without changes in intensity or corrosiveness for a long time
- Assembly of structure does not cause corrosiveness on a potential difference by using MacBolt with high anti-corrosiveness.
- Designed with structure without welding work, it is simple to proceed manufacturing process. Without non-conforming elements on the assembly and installation process, the error in the construction is the least among all other construction processing methods.
- No wastes from the structure by demolishing after using the power plant and 100% recyclable



ISS-282S

### What is floor beam?

As a method to use the solar energy structure that used previous concrete foundation or zinc plated screw files in the past with floor foamed beams produced in specifications from the factory, it is a new construction processing method with shortened construction period and cost reducing effect as it has high stableness and durability of the product with convenient installation.

### What is modular construction processing method?

It is the patented construction processing method of ISON Solar Corporation delivering and installing the combined products assembled in the factory based on solar energy module, supportive structure, and horizontal beam after the arrangement.

### What is PosMac

**(abbreviation for POSCO Magnesium Aluminum alloy coating product)**

Product name of POSCO, the world-renowned steel company. As a product plated with grade chemicals alloy (Zn- 94.5%, Mg-3%, and AL-2.5%) with outstanding anti-corrosiveness, it is a product with outstanding anti-corrosiveness for 5 times higher than the regular melted zinc plated steel plates attached with alloy.

### What is carbon certificate policy?

It is a policy for certifying the total amount of green gas emitted from the entire periods of a product including production, distribution, and disposal of raw materials.

## Advantages of Floor beam modular construction processing method

### Economic

- As a modular construction processing method with the foundation construction with floor beams, it is convenient to assemble and uses devices to install them. Therefore, there is a high effect in reducing the costs for construction.

### Enhanced quality & stableness

- Foundation of solar energy structure installed on the ground is divided into ground cutting and dirt piled areas causing issues on the stableness due to different degree of penetration as time passes. This is the foundation construction processing method to minimize this issue.

### Convenience of construction

- As there is no need to adjust location and height of structure when constructing it in the field, it is available to promote convenience and prevent the issues of error in the construction from poor adjustment.
- As a standardized product from the factory, delivery is fast without causing difference in the quality, and both experienced technicians and regular people are able to easily install and assemble them.

### Eco-friendly products

- Use anti-corrosive steel eco-friendly materials (PosMac) of POSCO, there is no pollution on the soil. If demolishing, they are fully recyclable (grade 1 carbon certificate construction processing method)

## Comparison of construction period between floor beam modular construction processing method and other construction processing methods

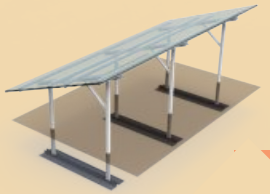

### Floor beam modular construction processing method

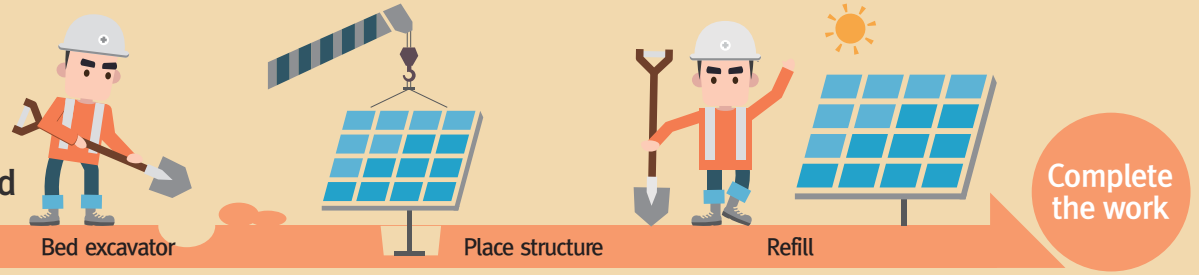


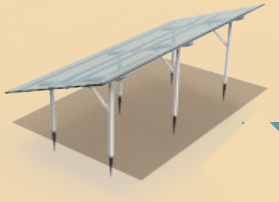

### Helical file foundation construction

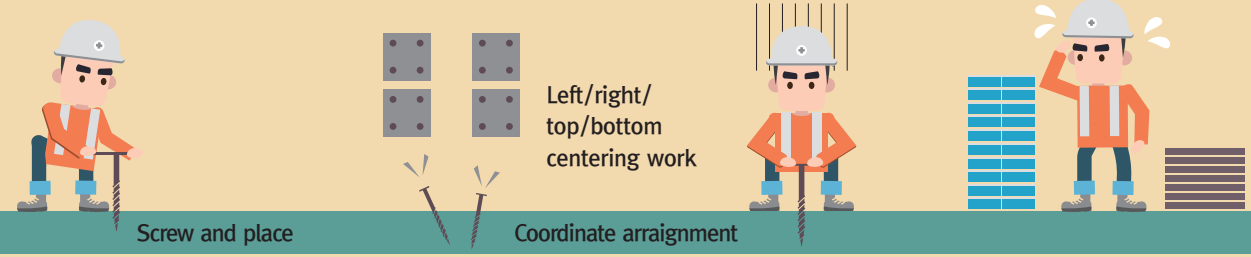


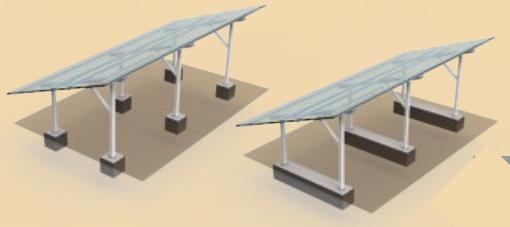

### Concrete foundation construction method

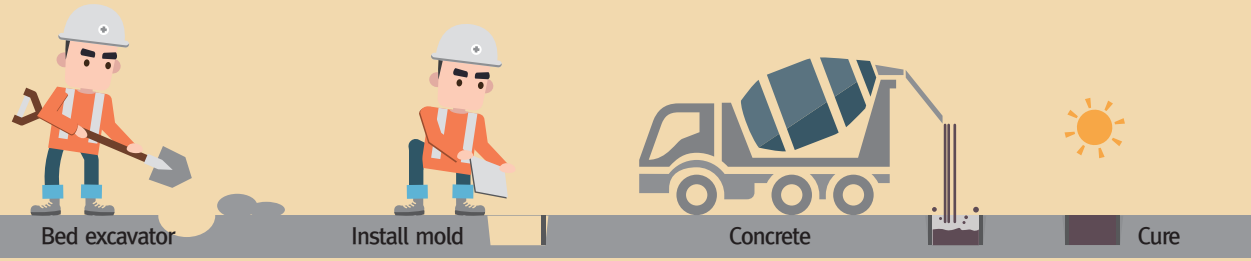

## Floor beam modular foundation construction processing method

| | |
|---|---|
| Characteristics | Foundation combined with structure |
| Construction processing method | Move and place structure assembled in the factory to the location of installation |
| Process | 1. Assemble structure<br>2. Bed excavator<br>3. Place structure (install all at one)<br>4. Refill/supplement |
| Advantages | – Maximum stableness of a structure with combined foundation<br>– Convenient construction: Shorten construction period with installation of device<br>– High quality: Guarantee production quality with specifications in the factory<br>– No environmental pollution (completely recyclable)<br>– Maximum anti-corrosiveness with 3 chemical plating Disadvantage<br>– Difficulty in construction on the bedrock |
| Disadvantages | – Difficulty in construction on bedrock |

## Helical file foundation construction method

| | |
|---|---|
| Characteristics | Separated foundation with structure |
| Construction processing method | Place materials and supplementary materials in each place of installation while operator moves them and assemble them |
| Process | 1. Construction on the ground<br>2. Rotated plantation of the file in the use of device<br>3. Parallel adjustment on the top part of file (about 1 to 2M of the length of file)<br>4. Anchor the connected parts<br>5. Assemble structure on the top part |
| Advantages | – Save cost in the civil engineering work<br>– Recyclable<br>– Relatively short construction period (increase of construction period in case of work on the bedrock |
| Disadvantages | – Difficulty in construction on bedrock<br>– Deep excavation on the weak ground<br>– Difficulty in arranging the height (parallel) of lanes (left/right/before/after) in case of installation of foundation<br>– Unstable construction if proceeding grouting construction processing method at the same time due to the lack of pull-out force |

## Concrete independent foundation construction method / Concrete lane foundation method

| | Concrete independent foundation construction method | Concrete lane foundation method |
|---|---|---|
| Characteristics | Separated foundation with structure | |
| Construction processing method | Move materials and supplementary materials to the each place of installation while operator moves and assembles them | |
| Process | 1. Bed excavator<br>2. Arrange and install the concrete foundation<br>3. Refill<br>4. Supplement and finalize earth and sand<br>5. Assemble the structure on the top | 1. Bed excavator<br>2. Install mold<br>3. Apply concrete<br>4. Remove mold after curing<br>5. Refill and supplement earth and sand<br>6. Assemble the structure on the top |
| Advantages | – Convenient construction if using existing parts<br>– Short construction period | – Safe and solid by connecting more than two pillars into one |
| Disadvantages | – Possibility of differential settlement<br>– Possibility of twisted solar energy structure<br>– Difficulty in arranging the height (parallel) of lanes (left/right/before/after) in case of installation of foundation<br>– Oxidize the soil and cause wastes when demolishing | – Convenient construction if using existing parts<br>– Shortened construction period<br>– Difficulty in arranging the height (parallel) of lanes (left/right/before/after) in case of installation of foundation<br>– Oxidize the soil and cause wastes when demolishing<br>– Long construction period<br>– Possibility of differential settlement<br>– Difficulty in arranging the height (parallel) of lanes (left/right/before/after) in case of installation of foundation<br>– Oxidize the soil and cause wastes when demolishing |

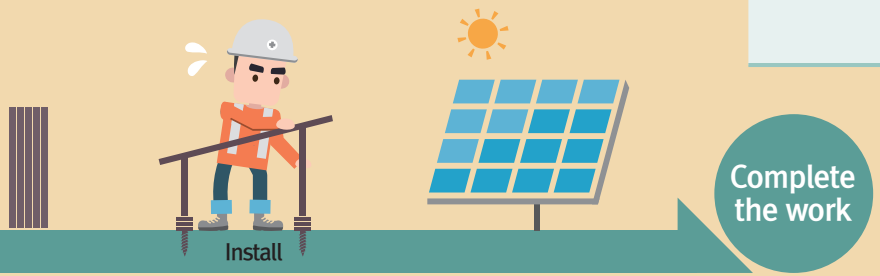


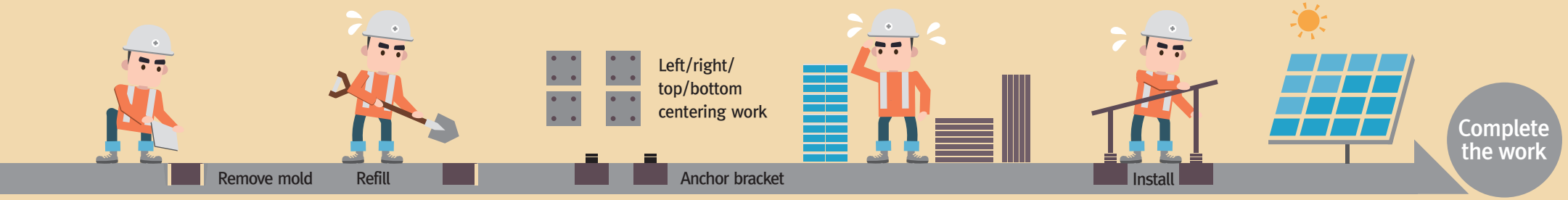

# Stability review of floor beam construction processing method

As a floor beam foundation construction processing method in the use of products made with high intensity and anti-corrosive metals (PoSMac), it is an eco-friendly foundation construction in the use of gravity including the weight of a structure and the supporting force from friction of ground from vertical plane of excavation as well as weight of soil on the floor beam.

## Vertical gravity force according to the depth of excavation including the weight of structure

Model : ISS -282S (single leg standardized and anchored type with 2 layers and 8 columns) 8m×4m, slope: 20 degree

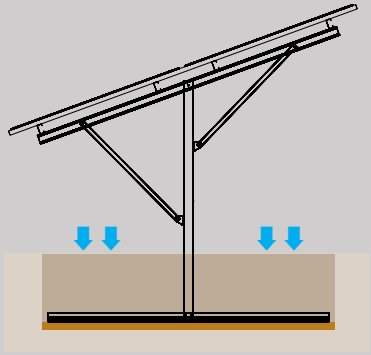

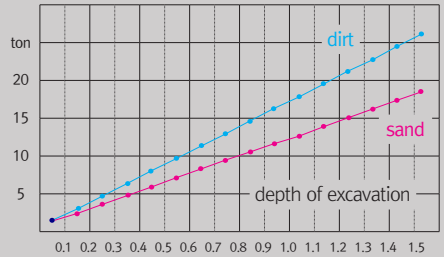


vertical load distribution

## Cross section of construction

Model : ISS -282S (single leg standardized and anchored type with 2 layers and 8 columns) 8m×4m, slope: 20 degree

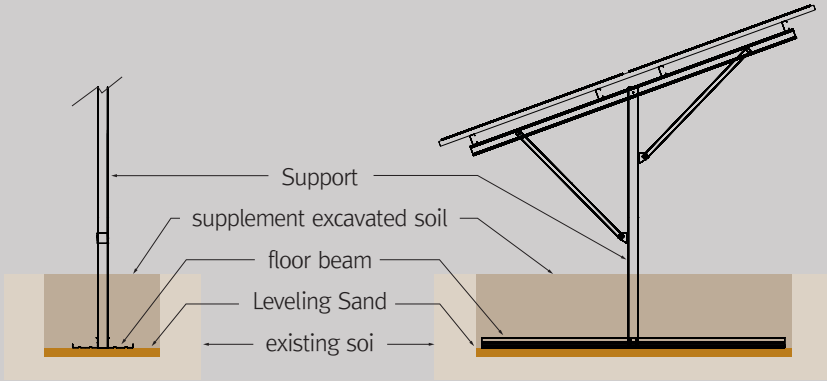


## Safety coefficient with wind speed of 40m/s and 20 degree tilted area

Model : ISS -282S (single leg standardized and anchored type with 2 layers and 8 columns) 8m×4m, slope: 20 degree



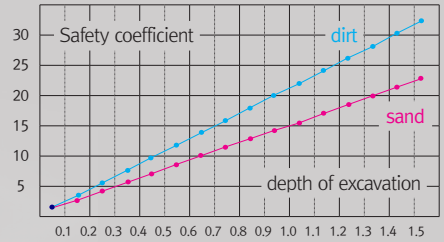


Appendix 1) Weight of application (dirt 2.6, sand 1.8)

## Foundation structure of floor beam

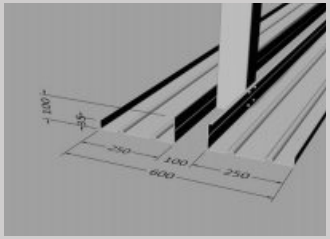

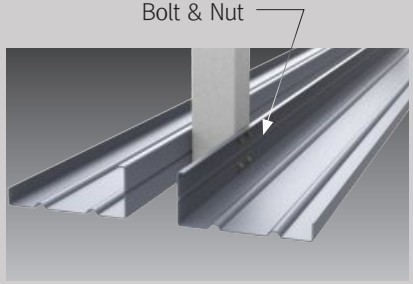

# Installation process

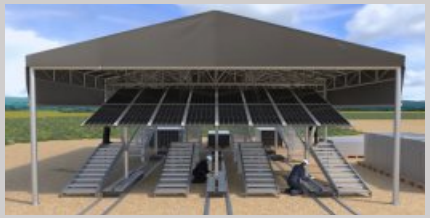

Assemble structure ▶

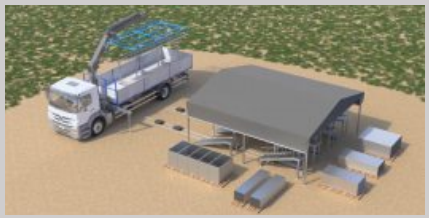

deliver ▶



bed excavator ▶



install product ▶



Vertical and horizontal adjustment ▶



1st refill ▶

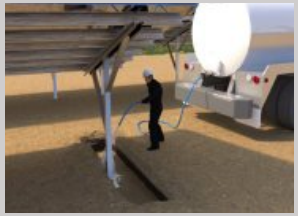

pour water ▶



2nd refill ▶



complete

# Maintenance



Management system in the use of drone

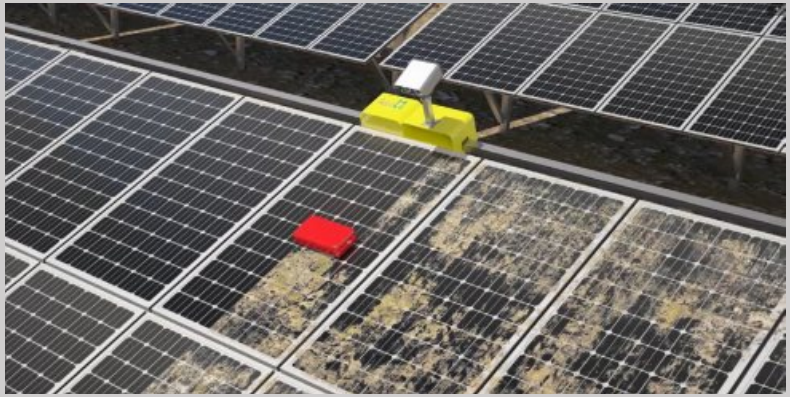

Management system in the use of mobile robot

# Single leg standard and anchored type

Model : ISS-282S



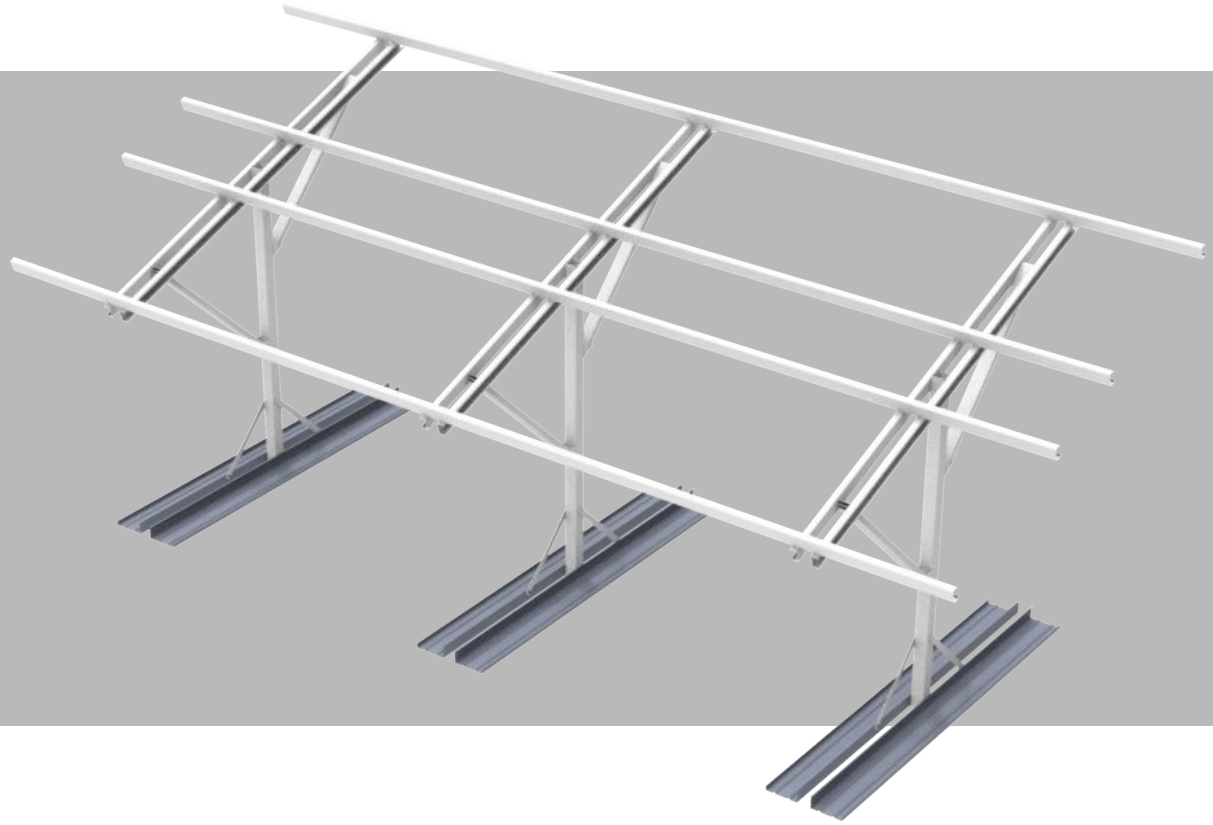

Type: 2 layers, 8 columns
Structure: Anchored (20 degree)
Wind speed in design: 40m/s
Appearance (mm) : 8,140(w)×3,426(d)×3,271(h)

## • Dimension(mm)

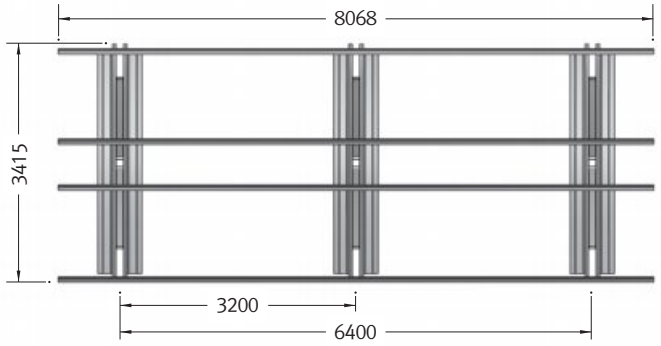


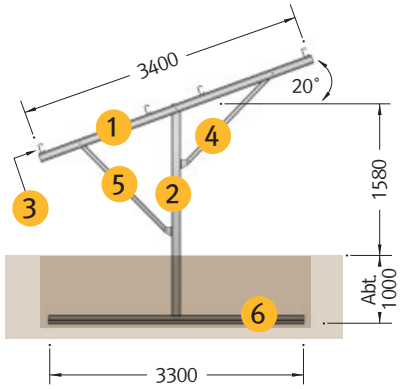


## • Specification

Unit : mm

| No | Item name | Specifications | texture | quantity |
|---|---|---|---|---|
| ① | Girder | ㄷ 100×50×20×2.3t – 3,400 | PosMAC 400 | 6 |
| ② | Column | □ 100×100×2.3t – 2,580 | PosMAC 400 | 3 |
| ③ | Purlin | ㄷ 100×50×20×2.3t – 8,068 | PosMAC 400 | 4 |
| ④ | Bracing 1 | □ 100×50×2.3t – 1,500 | PosMAC 400 | 3 |
| ⑤ | Bracing 2 | □ 100×50×2.3t – 1,500 | PosMAC 400 | 3 |
| ⑥ | Floor Beam | ㄷ 250×100×35×3.0t – 3,300 | PosMAC 400 | 6 |

# Two legs standardized and anchored type

Model : ISS-282D



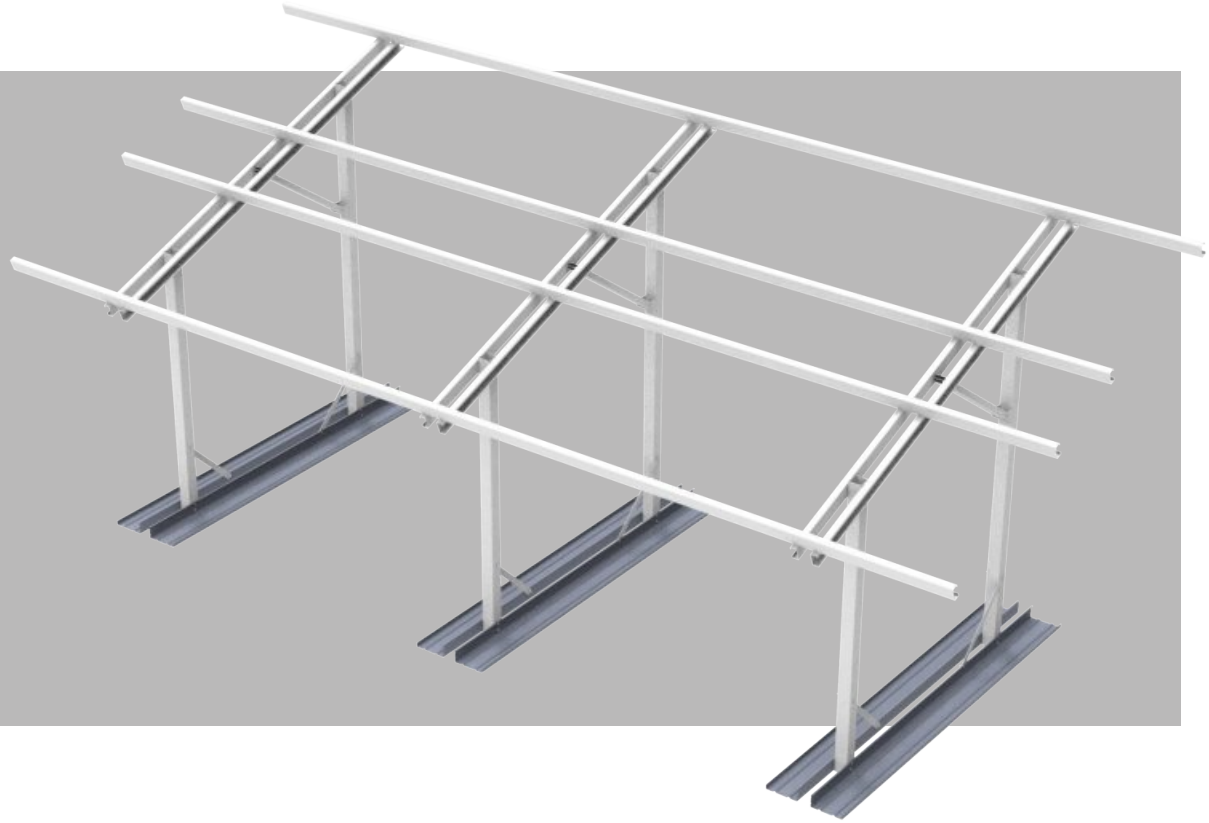

Type: 2 layers, 8 columns
Structure: Anchored (20 degree)
Wind speed in design: 40m/s
Appearance(mm) : 8,140(w)×3,426(d)×3,213(h)

## • Dimension(mm)

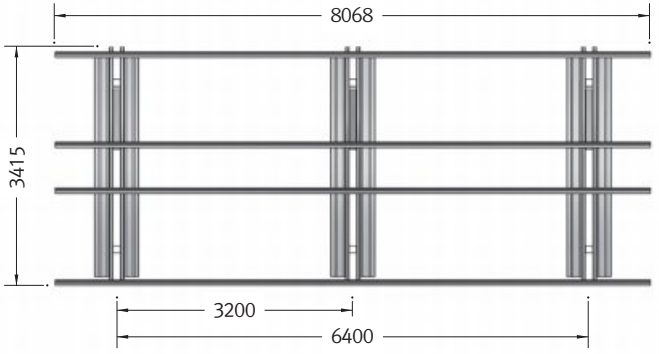


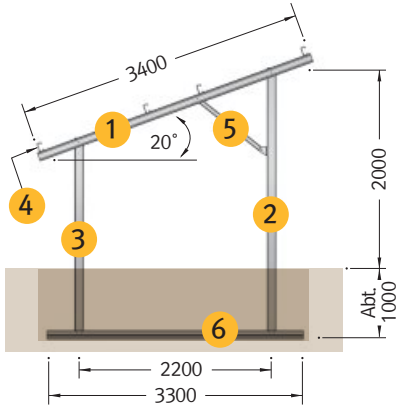


## • Specification

Unit : mm

| No | Item name | Specifications | texture | quantity |
|---|---|---|---|---|
| ① | Girder | ㄷ 100×50×20×2.3t - 3,400 | PosMAC 400 | 6 |
| ② | Column 1 | □ 100×100×2.3t - 3,000 | PosMAC 400 | 3 |
| ③ | Column 2 | □ 100×100×2.3t - 2,200 | PosMAC 400 | 3 |
| ④ | Purlin | ㄷ 100×50×20×2.3t - 8,068 | PosMAC 400 | 4 |
| ⑤ | Bracing | □ 100×50×2.3t - 1,000 | PosMAC 400 | 3 |
| ⑥ | Floor Beam | ㄷ 250×100×35×3.0t - 3,300 | PosMAC 400 | 6 |

# Two legs horizontal beam anchored type

Model : ISS-282DH



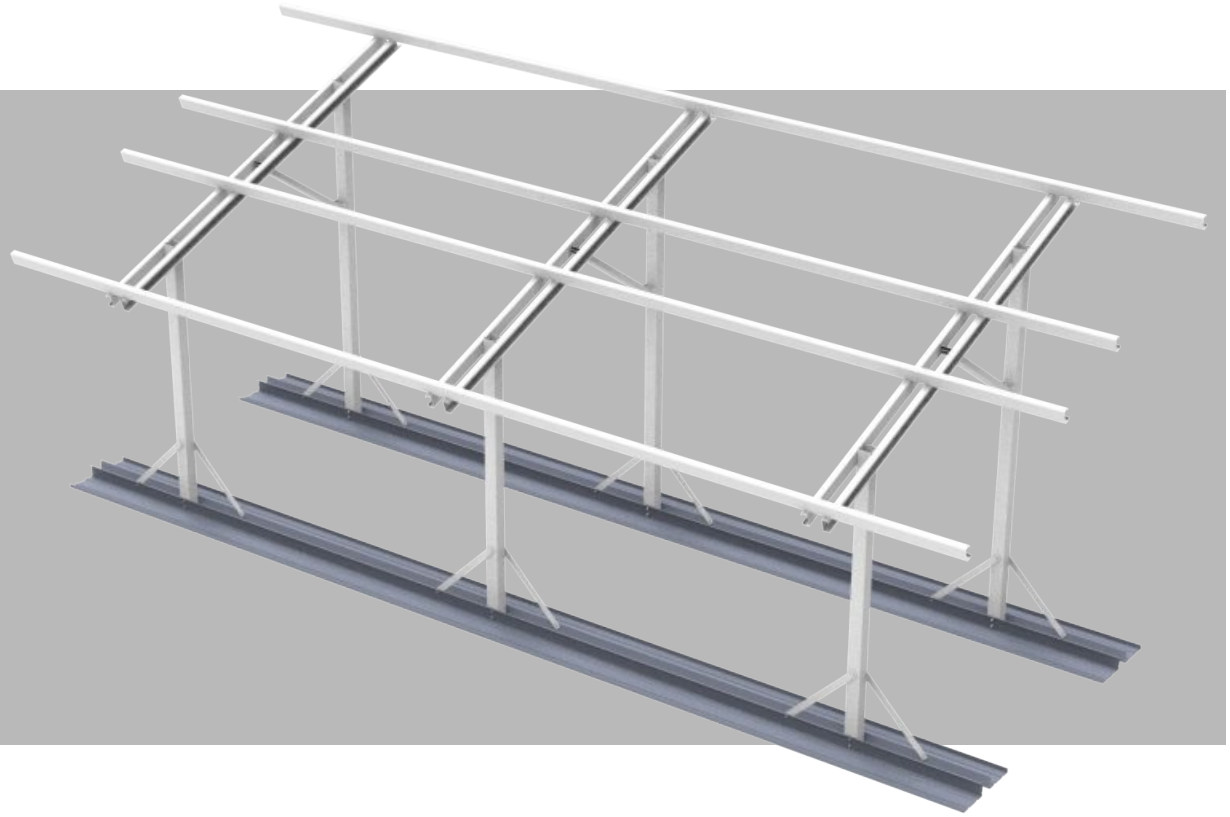

Type: 2 layers, 8 columns
Structure: Anchored (20 degree)
Wind speed in design: 40m/s
Appearance(mm) : 8,140(w)×3,426(d)×3,213(h)

## • Dimension(mm)

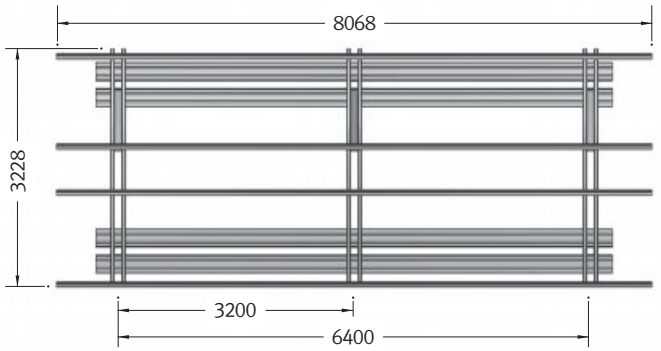


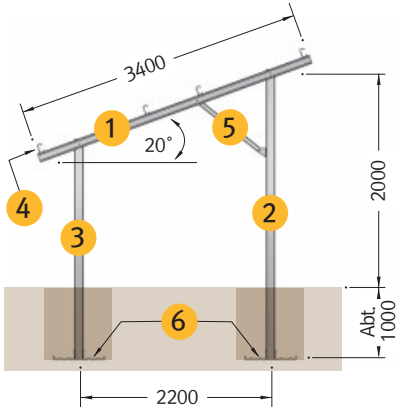


## • Specification

Unit : mm

| No | Item name | Specifications | texture | quantity |
|---|---|---|---|---|
| ① | Girder | ㄷ 100×50×20×2.3t – 3,400 | PosMAC 400 | 6 |
| ② | Column 1 | □ 100×100×2.3t – 3,000 | PosMAC 400 | 3 |
| ③ | Column 2 | □ 100×100×2.3t – 2,200 | PosMAC 400 | 3 |
| ④ | Purlin | ㄷ 100×50×20×2.3t – 8,068 | PosMAC 400 | 4 |
| ⑤ | Bracing | □ 100×50×2.3t – 1,000 | PosMAC 400 | 3 |
| ⑥ | Floor Beam | ㄷ 250×100×35×3.0t – 9,900 | PosMAC 400 | 4 |

# Two legs standardized and anchored type

Model : ISS-482D



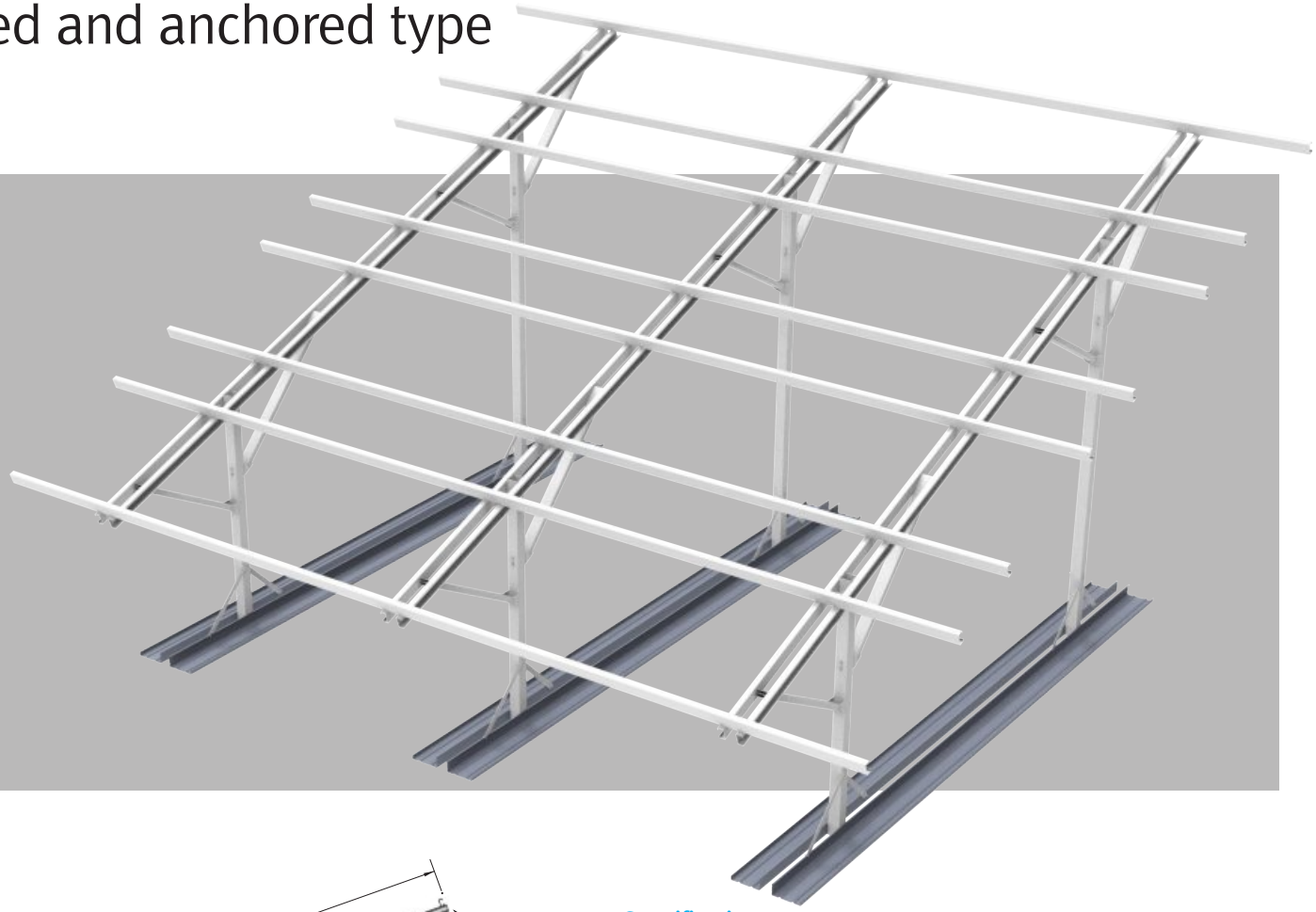

Type: 4 layers, 8 columns
Structure: Anchored (20 degree)
Wind speed in design : 40m/s
Appearance(mm) : 8,140(w)×7,127(d)×4,663(h)

## • Dimension(mm)

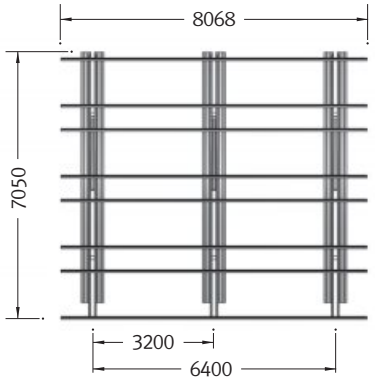


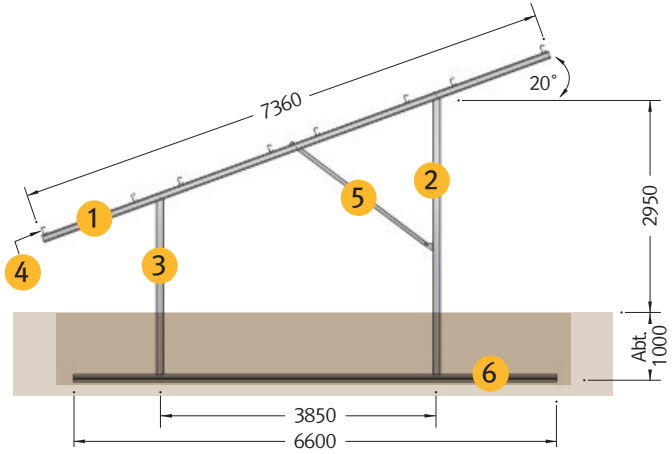


## • Specification

Unit : mm

| No | Item name | Specifications | texture | quantity |
|---|---|---|---|---|
| ① | Girder | ㄷ 100×50×20×2.3t – 7,360 | PosMAC 400 | 6 |
| ② | Column 1 | □ 100×100×2.3t – 3,950 | PosMAC 400 | 3 |
| ③ | Column 2 | □ 100×100×2.3t – 2,570 | PosMAC 400 | 3 |
| ④ | Purlin | ㄷ 100×50×20×2.3t – 8,068 | PosMAC 400 | 8 |
| ⑤ | Bracing | □ 100×50×2.3t – 2,200 | PosMAC 400 | 3 |
| ⑥ | Floor Beam | ㄷ 250×100×35×3.0t – 6,600 | PosMAC 400 | 6 |

# Two legs horizontal beam anchored type

Model : ISS-482DH



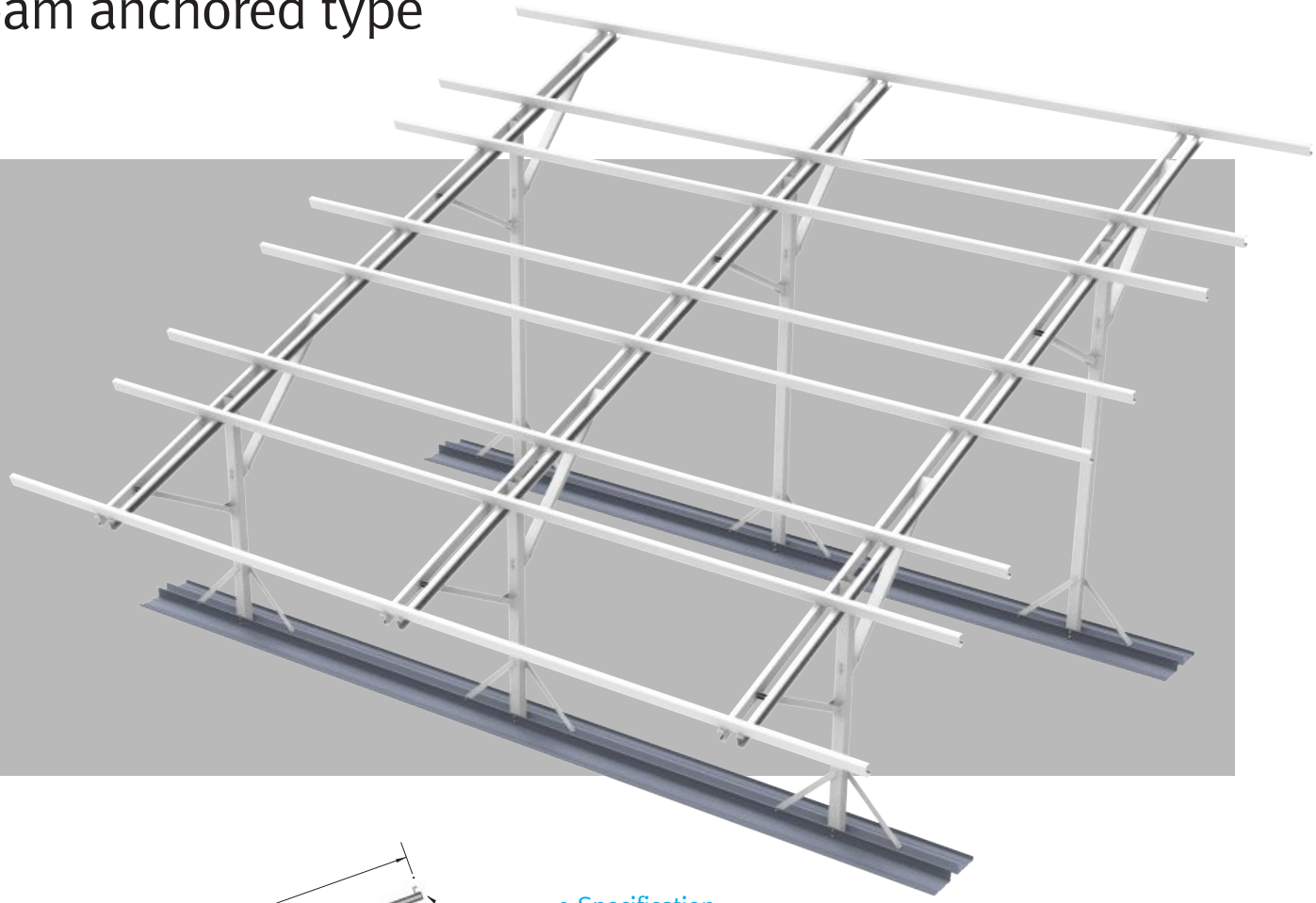

Type: 4 layers, 8 columns
Structure: Anchored (20 degree)
Wind speed in design : 40m/s
Appearance(mm) : 8,140(w)×7,127(d)×4,663(h)

## • Dimension(mm)

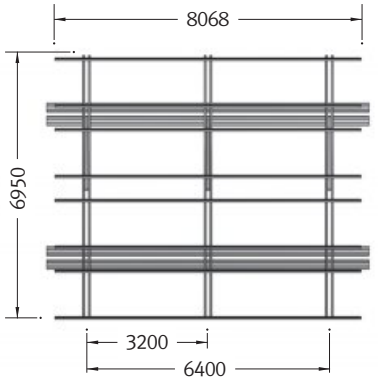


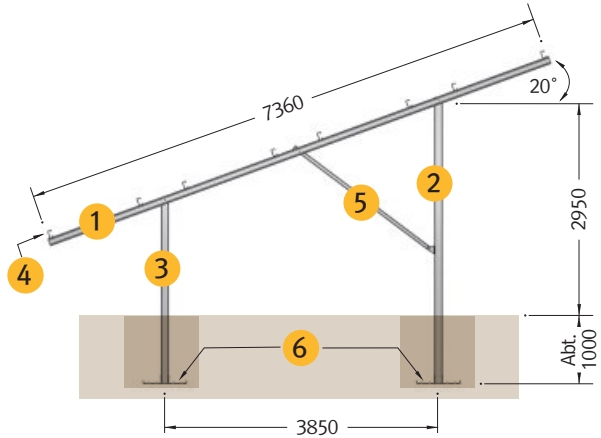


## • Specification

Unit : mm

| No | Item name | Specifications | texture | quantity |
|---|---|---|---|---|
| ① | Girder | ㄷ 100×50×20×2.3t – 7,360 | PosMAC 400 | 6 |
| ② | Column 1 | □ 100×100×2.3t – 3,950 | PosMAC 400 | 3 |
| ③ | Column 2 | □ 100×100×2.3t – 2,570 | PosMAC 400 | 3 |
| ④ | Purlin | ㄷ 100×50×20×2.3t – 8,068 | PosMAC 400 | 8 |
| ⑤ | Bracing | □ 100×50×2.3t – 2,200 | PosMAC 400 | 3 |
| ⑥ | Floor Beam | ㄷ 250×100×35×3.0t – 9,900 | PosMAC 400 | 4 |

# Single leg standardized variable type

Model : ISS-282V



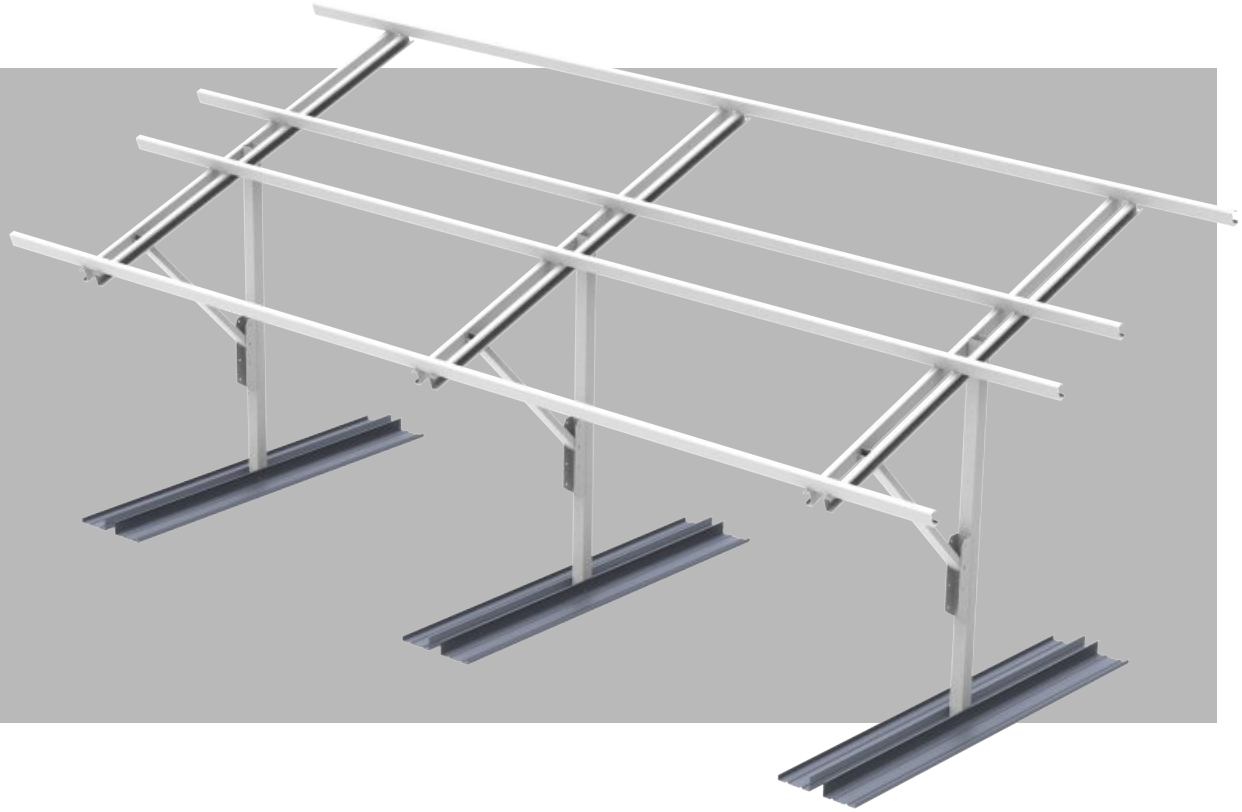

Type: 2 layers, 8 columns
Structure: Variable
Wind speed in design : 40m/s
Appearance(mm) : 8,140(w)×3,426(d)×3,271(h)

## • Dimension(mm)

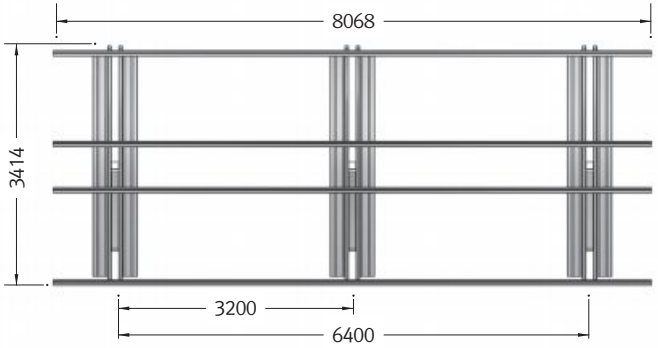


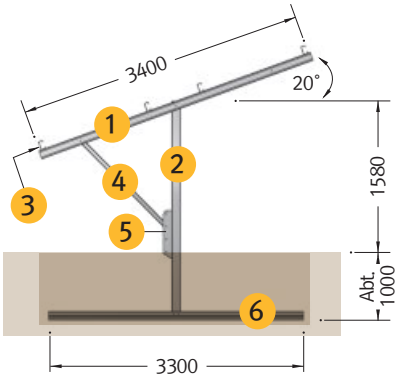


## • Specification

Unit : mm

| No | Item name | Specifications | texture | quantity |
|---|---|---|---|---|
| ① | Girder | ㄷ 100×50×20×2.3t - 3,400 | PosMAC 400 | 6 |
| ② | Column | □ 100×100×2.3t - 2,580 | PosMAC 400 | 3 |
| ③ | Purlin | ㄷ 100×50×20×2.3t - 8,068 | PosMAC 400 | 4 |
| ④ | Bracing | □ 100×50×2.3t - 1,479 | PosMAC 400 | 3 |
| ⑤ | Bracket | ㄷ 100×100×6t - 565 | PosMAC 400 | 3 |
| ⑥ | Floor Beam | ㄷ 250×100×35×3.0t - 3,300 | PosMAC 400 | 6 |

# Comparison of solar energy development structures from ISON













| Item name | Structure | Entire size of each product (w)×(d)×(h) mm |
|---|---|---|
| **Single leg standardized and anchored type** ISS-282S | 2Layer, 8Column<br>Structure : Anchored (20 degree)<br>Wind speed in design : 40m/s | 8,140×3,426×3,271 |
| **Two legs standardized and anchored type** ISS-282D | 2단 8열<br>Structure: Anchored (20 degree)<br>Wind speed in design : 40m/s | 8,068×3,413×3,240 |
| **Two legs standardized and anchored type** ISS-282DH | 2단 8열<br>Structure: Anchored (20 degree)<br>Wind speed in design : 40m/s | 9,900×3,228×3,240 |
| **Two legs standardized and anchored type** ISS-482D | 4단 8열<br>Structure: Anchored (20 degree)<br>Wind speed in design : 40m/s | 8,068×7,050×4,566 |
| **Two legs standardized and anchored type** ISS-482DH | 4단 8열<br>Structure: Anchored (20 degree)<br>Wind speed in design : 40m/s | 9,900×6,950×4,566 |
| **Single leg standardized variable type** ISS-282V | 2단 8열<br>Structure: Anchored<br>(15/20/25/30 degree)<br>Wind speed in design : 40m/s | 8,068×3,414×3,240 |

## Classification of each type of support for solar energy structure

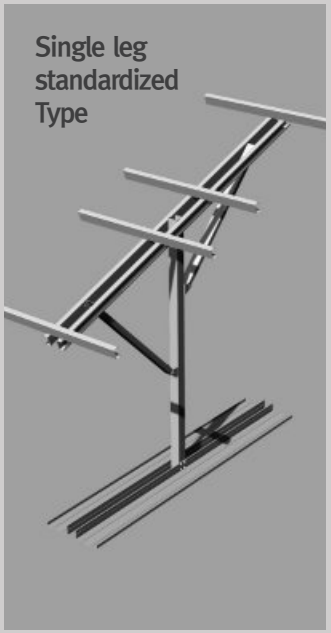


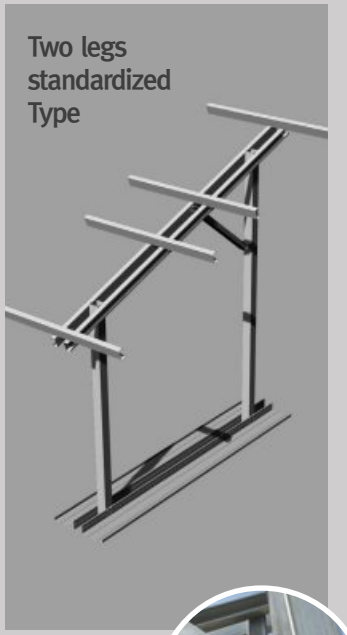


## Supplementary materials for the sup



⊏ Bracket
304×105mm×4t



Bolt-Nut Washer
SUS M12×130mm



Bolt-Nut Washer
SUS M10×130mm



# Test results of anti-corrosiveness of solar energy structure materials

## Comparison of anti-corrosiveness of plate between Melted zinc plated materials (GI (H)) / Galvarium (CCT)

- PosMac has outstanding anti-corrosiveness on the planar portion for 5 to 10 times higher than the melted zinc plated steel plate. In addition, PosMac shows outstanding anti-corrosiveness that is equivalent with or higher than Galvarium.

ISON Solar Corporation
Products used when manufacturing solar energy structure

| CCT | GI(H) | | | | Galvarium | PosMAC | | |
|---|---|---|---|---|---|---|---|---|
| Total of both sides of plating | 120g/㎡ | 200g/㎡ | 300g/㎡ | 600g/㎡ | 100g/㎡ | 140g/㎡ | 200g/㎡ | 275g/㎡ |
| 10 cycle (80Hr) |  |  |  |  |  |  |  |  |
| 70 cycle (560Hr) |  |  |  |  |  |  |  |  |
| 120 cycle (960Hr) |  |  |  |  |  |  |  |  |

How to test: CCT test
CCT 1 cycle: 2 hours for spraying the salt water → Dry → Moisturize

## After fastening to the PosMac steel plate

- Results of comparison on the corrosiveness on potential difference after proceeding 1000 hours of spraying sale water

ISON Solar Corporation
Products used when manufacturing solar energy structure



STS 304 Bolt (스테인리스 볼트)

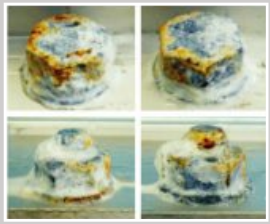

Hot Dip Galvaizing Bolt (용융아연도금)

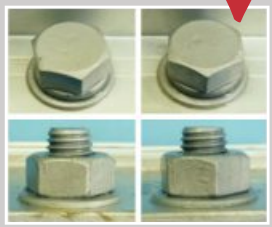

MAC Coating Bolt (맥코팅 볼트도금)

# Examples of wrong construction









Construction processing method in grade 1 of carbon certificate

ISON INFRA SOLUTION

Main office : 151 118-gil, Youngilmansandan-ro, Heunghae-eup, Buk-gu, Pohang-si, Gyeongguk, Korea
Seoul office : Room 1325 at 34, Sajik-ro 8-gil, Jongro-gu, Seoul, Korea

www.isonsolar.com